CRYSTAL
SBX - 15

TUNING FORK

LEAD TYPE

PICTURE
AREA

APPLICATIONS

- ►LCD
- ►LAN card
- ►Main board
- ►Timing peripherals

OUTLINE DIMENSIONS

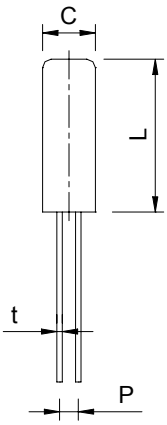

type	L	P	C	t
A	10.3	1.1	3.1	0.32
B	9.3	1.1	3.1	0.32
C	8.3	1.1	3.1	0.32
D	8.3	0.8	3.1	0.32
E	6.0	0.8	2.1	0.2
F	5.0	4.0	1.5	0.2
G	4.6	4.0	1.2	0.15

ELECTRICAL SPECIFICATIONS

Frequency range	30.000KHz ~ 77.502KHz	
Frequency tolerance	±20ppm	±30ppm
Frequency stability	±30ppm	±50ppm
Operating temperature range	-10 °C ~ 60 °C	-20 °C ~ 70 °C
Operable temperature range	–40 °C ~ 85 °C	
Storage temperature range	–55 °C ~ 125 °C	
Temperature coefficient	-0.04ppm / °C^2 max.	
Shunt capacitance (C_0)	1.35pF max.	
Motional capacitance (C_1)	1.8fF (Typical)	
Load capacitance (C_L)	6pF to ∞, 12.5pF (Typical)	
Series resistance (ESR)	50KΩ max. (Typical)	
Drive level	1.0μW max. (Typical)	
Aging (at 25 °C)	±5ppm / year max.	
Insulation resistance	500MΩ min.	
Shock resistance	±5ppm max.	

ORDERING GUIDE

SBX - 14 - Frequency :

Load capacitance	:	pF
Crystal impedance	:	Ω
Stability	: ±	ppm (at 25 °C)
Tolerance	: ±	ppm (°C ~ °C)
Drive level	:	μW
Shunt capacitance	:	pF
Package type	: A ~ E	
Packing type	: Bulk / Lead forming for SMT	

Specifications subjects to change without notice & If you need other specifications, Contact our factory.

TEMPERATURE CHARACTERISTICS

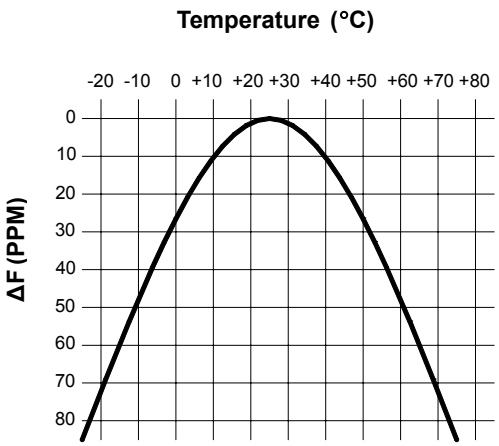

APPLICATIONS CIRCUIT

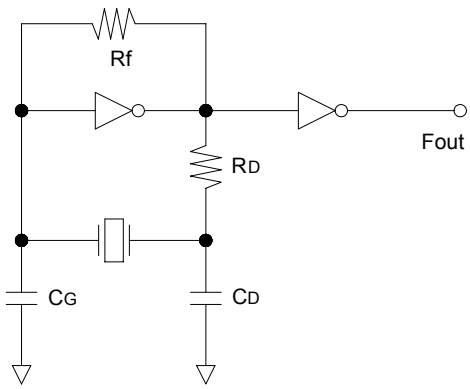

The majority of applications use a KHz crystal in an oscillator circuit Incorporating binary division to produce a 1.0Hz output.

SBtron
www.sbtron.co.kr

#301-4, Samju Building, 954, Docksan-dong, Kuemchun-Gu, Seoul, Korea
Tel : +82 2 858-3947 / +82 2 851-7921 • Fax : +82 2 856-8349
Domestic : sales@sbtron.co.kr • International : overseas@sbtron.co.kr • Engineering : eng@sbtron.co.kr